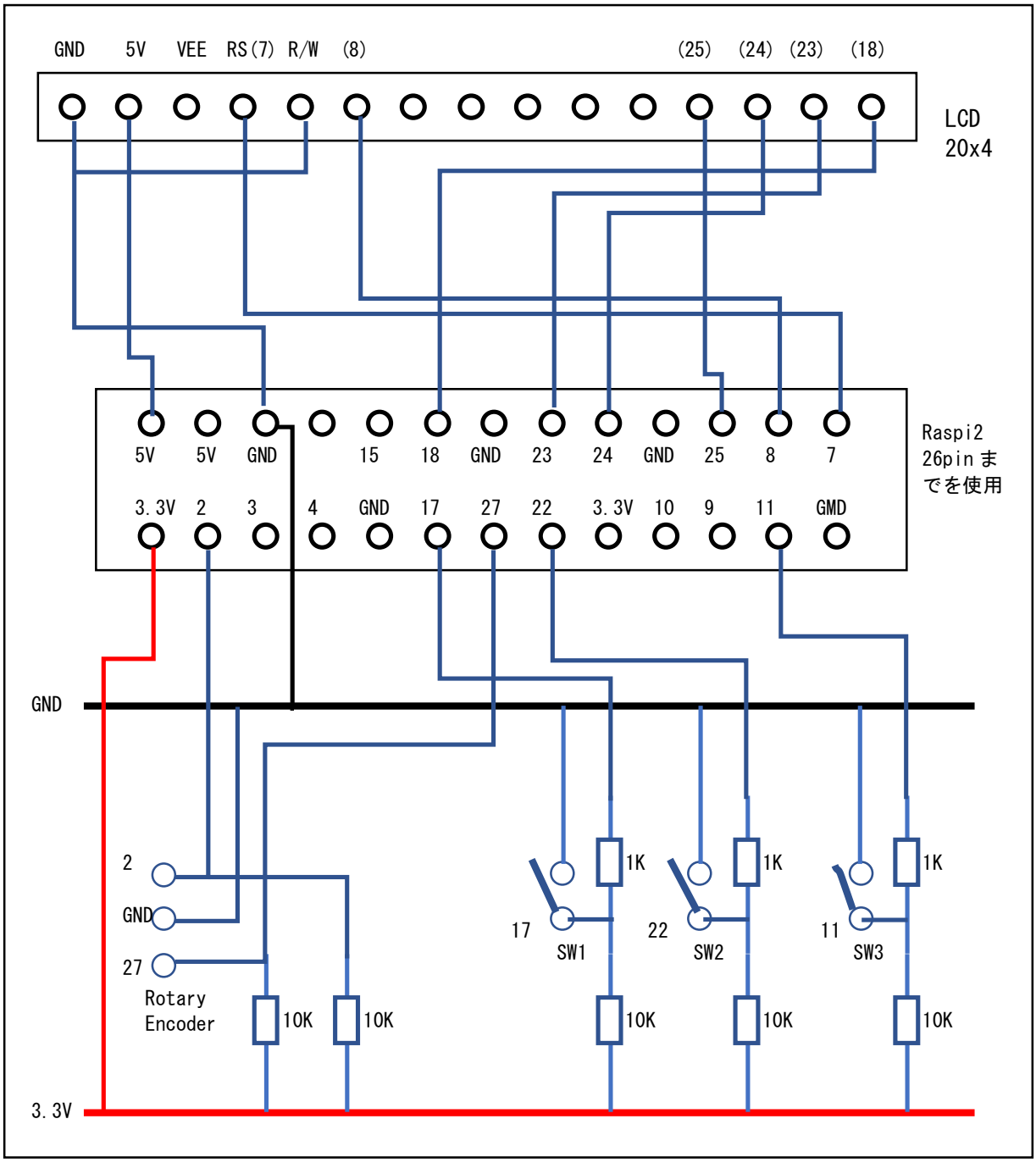
GND
5V
VEE
RS(7)
R/W
(8)
(25)
(24)
(23)
(18)
LCD
20x4
5V
5V
GND
15
18
GND
23
24
GND
25
8
7
3.3V
2
3
4
GND
17
27
22
3.3V
10
9
11
GMD
Raspi2
26pin ま
でを使用
GND
2
GND
27
Rotary
Encoder
10K
10K
1K
17
SW1
10K
1K
22
SW2
10K
1K
11
SW3
10K
3.3V